Accumulator Management System (AMS) Module

Manya Shah , Shubh Tangri , Vishnu Bijarniya- JDEs
Ruchi Jain - DE
Saurabh Prajapati - CT

INDEX

- Intro to AMS
  - What is an AMS?
  - Market AMS vs in-house AMS
- Accumulator configuration
- Shutdown circuit
- Accumulator charging
- PCBs in AMS
  - A brief on the various boards
  - Communication between the boards
- Communication
- Cell Chemistry and Modelling
  - Charging and discharging curves
  - SOC and SOH estimation
- Data analysis
- Cell balancing techniques
- AMS Code flowchart

Feel free to contact us AMS DEs for any doubts or further clarity.

→ Intro to AMS

- Here is a video introduction to what a BMS is. Take a look at it.
  What is a Battery Management System?

  As we saw, the main objective is to ensure the accumulator works safely and reliably by constantly measuring the cell voltages, temperatures, and currents. This system is crucial for the safety of the driver and the car. Having an efficient BMS improves the lifespan of the cells.

  PS: the terms AMS (accumulator management system) and BMS (battery management system) can be used interchangeably.

  Using an in-house BMS is much more advantageous than using a market-ready one. The first and foremost reason is the expense of buying one and the lack of flexibility. If we develop our own AMS, we can optimize it as per our application and minimize the costs while also enabling us to work with the system at a very low level, giving us greater control over it.

→ Latest Accumulator configuration

- Our accumulator configuration is 96s5p, which means that our accumulator is made up of 96 cell modules connected in series and each cell module is made up of 5 cells connected in parallel i.e total of 480 lithium-ion cells.

Quick quiz:- why do you think 5 cells are joined in parallel?

- 5 cells are connected in parallel to make a cell module. 16 of these are connected in series to build a stack. The accumulator consists of 6 such stacks in series.

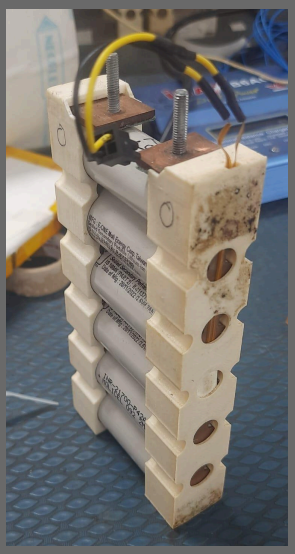

(Old cell module)

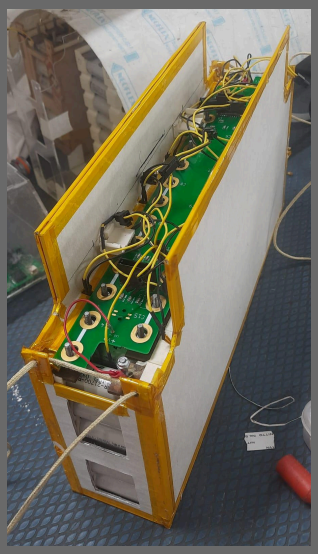

(Old stack)

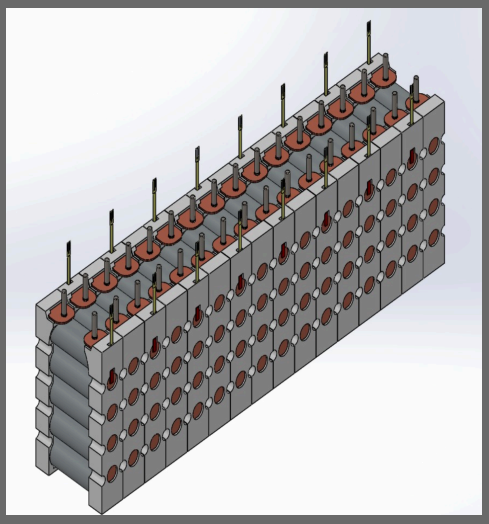

(New stack)

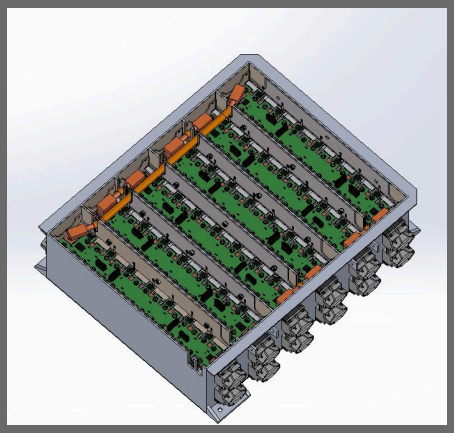

(Accumulator)

- Each cell has a nominal voltage of 3.6V (max voltage-4.2V) which makes it a battery of maximum voltage of 403.2V.
  Check out our new cells datasheet- INR21700-P45B-Molicel

- The old accumulator configuration was 90s6p with this cells - INR21700-P42A

Quiz:- Analyze why do you think we changed to the new confihguration find all pros and cons ?

→ Shutdown Circuit

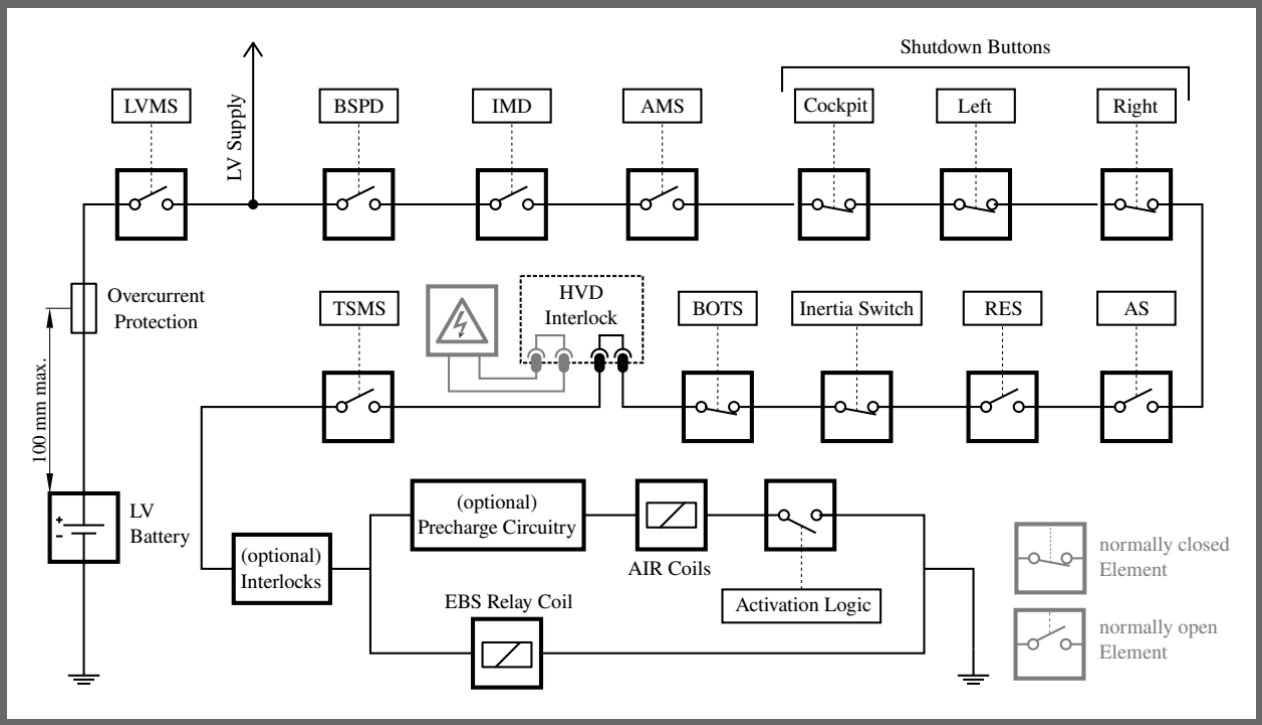

The shutdown circuit is an LV safety circuit that ensures all systems work properly and quickly cut off the accumulator supply in case of emergencies.

- The ***LVMS (Low Voltage Master Switch)*** is a physical switch placed on the side of the car that activates the LV system of the car and sends 12V through the remaining shutdown circuit as well.

- The ***BSPD or Brake system plausibility Device*** opens the SDC (shutdown circuit) when hard braking occurs. Hard braking is said to occur when an unusually huge power is delivered to the motors. This usually happens when the driver in case of panic, presses both the accelerator and the brakes simultaneously. In such a situation the motors will try to spin the rotor but at the same time, the brakes will restrict it, due to which the motor draws huge amounts of current to overcome the force applied by the brakes.

- ***IMD (Insulation Monitoring Device)*** continuously measures the resistance between the LV and HV paths. If the resistance falls below a certain threshold, the SDC is opened.

- The ✨❤️***Accumulator Management System (AMS)***✨❤️ monitors the cell voltages, temperatures, and currents and opens the SDC if any of these parameters go out of bound over a range of time.

- Then along the SDC path you can see three ***shutdown buttons***. These are physical buttons that are normally closed. These can be opened by the driver or an authorized person standing outside the car by pressing the button.

- ***AS, RES, and EBS*** are related to the driverless system. We don't need to bother ourselves with these three.

- The ***Inertia switch*** detects any heavy jerk on the car. This is necessary to detect crashes and cut the accumulator supply.

- ***BOTS or Brake Over-Travel Switch*** is useful to detect any abnormalities with the brake pedal. This switch is kept behind the brake pedal which is usually not in reach even during maximum pedal travel. However, in case the brakes don't work properly say in case of leakage of brake fluids, the brake pedal can travel even further due to the loss in pressure. Thus, the switch gets pressed and the SDC is opened.

- The ***HVD (High Voltage Disconnect)*** is a mechanism to physically remove an element of the TS path to stop the supply. It is found at the rear part of our car.

- ***TSMS or Tractive System Master Switch*** is a physical switch placed on the side of the car which is the last switch before the AIRs.

- The ***precharge circuitry*** and the ***AIRs*** control the precharge process and allow the accumulator voltage to reach the motor controllers.

- We require an ***Activation Logic*** and in our car, we call it the HV RESET, a physical button in the cockpit that the driver presses after all the checks to finally make the vehicle HV active and ready to race! 🏎️

→ Accumulator charging

The charger accepts input from an AC power source and operates at a constant 3.3kW of power . It provides a maximum DC output voltage of 440V to charge the accumulator.

Control of the charger is managed by the Battery Management System (BMS) via CAN communication. The BMS can halt the charging process of the accumulator in two ways: by sending a CAN message to stop charging or by opening the shutdown circuit, which isolates the accumulator and disables the charger's charge enable input.

The charger features three connectors: Input power, Output Power, and Control I/O. The Output connector includes an interlock, which is part of the charger's shutdown circuit and must be engaged before the charger can start supplying power. The High Voltage (HV) connectors of the accumulator containers also have an interlock which is also part of the shutdown circuit, and must be linked to the charger interlock for energization.

The charger's shutdown circuit comprises BMS error detection, IMD error detection, and a push-type emergency kill switch, along with the charger and HV interlocks. Additionally, two TSMPs are connected to the HV output of the charger via 15k ohm resistors. The kill switch is rated for 14V and 21A, with a diameter of 30 mm. Current flow through the same AIRs used for discharging, which are controlled by the Accumulator Control Unit (ACU) board. The precharge circuit remains inactive during charging.

Question :

1. **How can I charge my battery with a dc off board charger of voltage 250V ? Any additional component or some different charging topology do we need to either add / adapt to get the task done ?**

→ PCBs in AMS

Various PCBs we have in AMS are -

1) Master Board
   It's the control center of the whole BMS that establishes iso-spi communication using LTC6820 with all the programmable microcontroller cell monitoring chips, LTC6813 on slave boards. It checks if the voltage, as well as the temperature of each cell module, is not out of the permissible range for more than a particular period, and triggers the AMS error if so.

   You can refer to these datasheets to know more about the ICs-
   [LTC6820 Datasheet and Product Info | Analog Devices]
   [LTC6813-1 Datasheet and Product Info | Analog Devices]

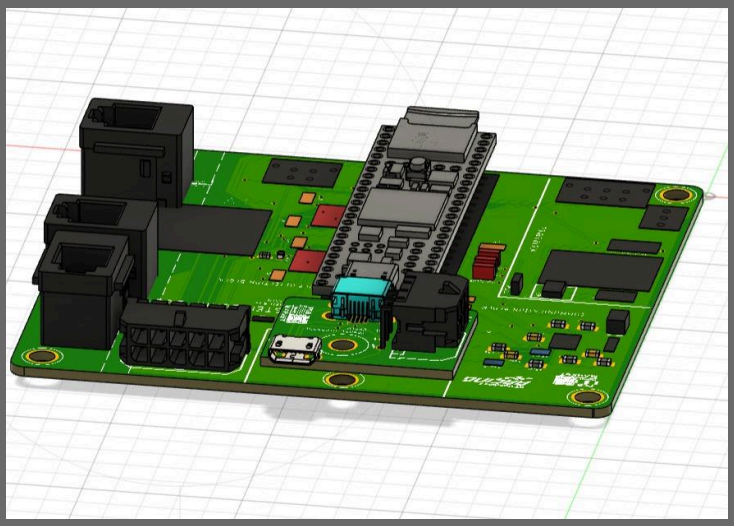

2) Slave Board
   It's the cell monitoring board that monitors the cell voltage and temperature of a stack. This board has a microcontroller LTC6813 which has an inbuilt iso-spi communication interface. It collects the voltage and temperature data and sends it back to the master board

Rulebook task -
Find the rule in the EV section of the FSA 2025 rulebook (find it online) which states the time required for the continuous occurrence of error in measured voltage and temperature before AMS error should be triggered?

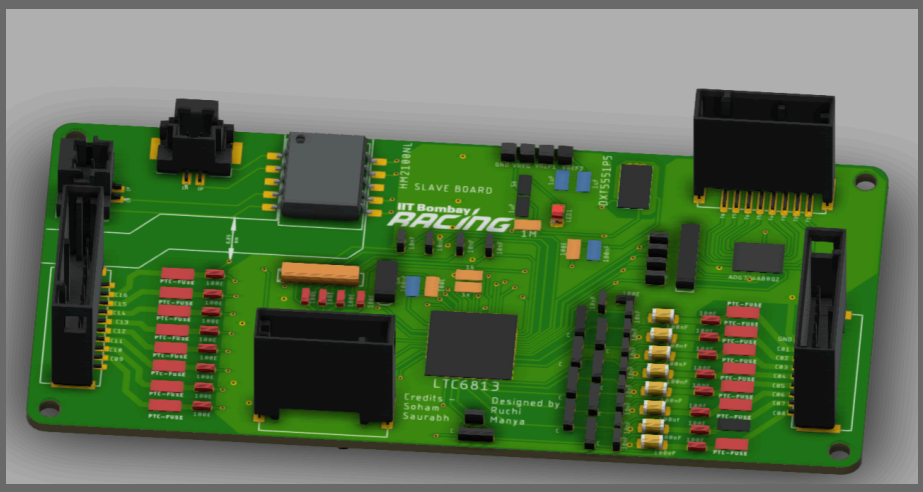

3) Battery Pack Monitor(BPM)

It's the board used to monitor the accumulator current, voltage, and charge Monitor for High Voltage Battery Packs. It also has an inbuilt iso-spi communication interface to share the measured data back to the AMS master which triggers AMS error, if any.

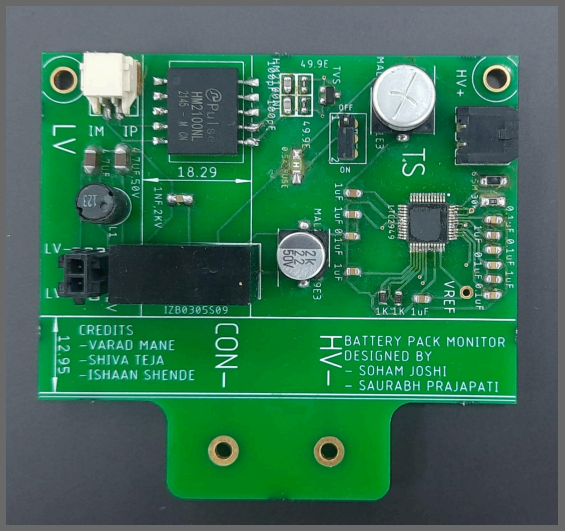

Read features and additional details - [LTC2949 Datasheet and Product Info | Analog Devices]

Assignment 1-
ICs obviously cannot read the entire accumulator voltage directly due to their voltage ratings. Thus we have another way to read the accumulator voltage. Take the schematic as a hint. Write a simple pseudocode for the accumulator voltage

measurement using LTC2949. Learn about the function of VBATP/M pins. HV- is connected to VBATM.

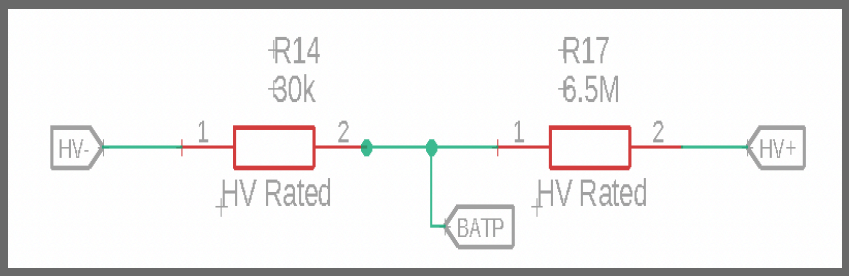

4) Busbar PCB
The voltage busbar allows the cell voltages from the stack to reach the slave.
The temperature busbar allows the voltages across the thermistors of each cell module to reach the slaves.

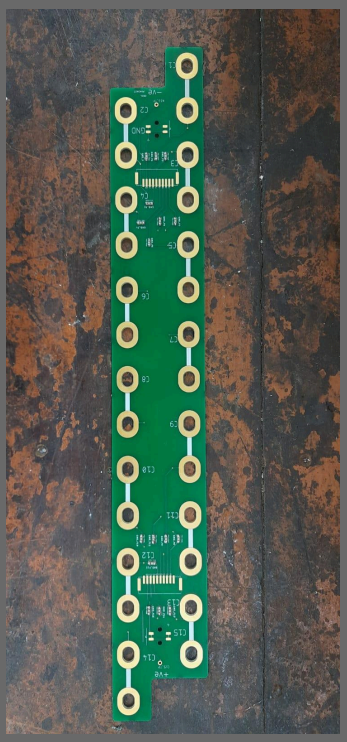

Voltage Busbar PCB

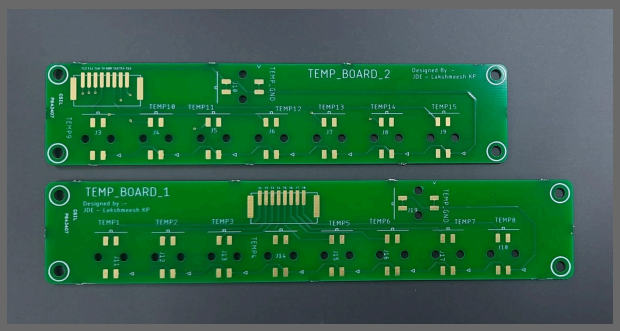

Temperature Busbar PCB

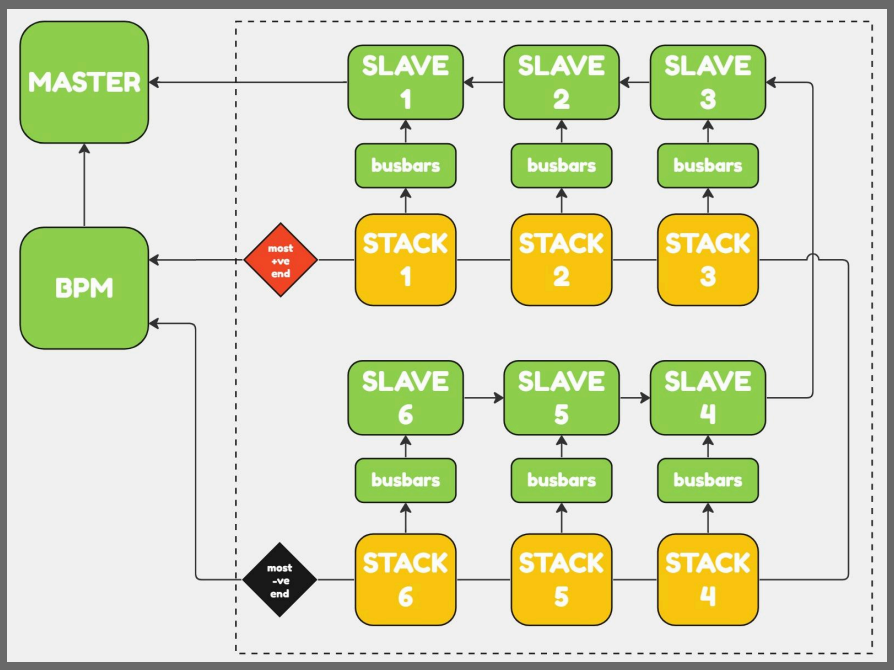

(connections between the boards)

→ Communication

We are required to transfer information between the various boards. How do we ensure that two different systems understand the bits transferred between them in the same way? This is done by using communication protocols.

Communication protocols help set guidelines for communication using which devices from various manufacturers can communicate seamlessly. Watch this video to get a basic idea of how communication happens:

PROTOCOLS: UART - I2C - SPI - Serial communications #001

We use the Iso-SPI protocol in AMS. So first let us get a better idea of the SPI protocol.

There are various modes of operation according to which the clock polarity and phase bits are set.

SPI MODE	CPOL	CPHA
0	0	0
1	0	1
2	1	0
3	1	1

We require you to surf the web to understand what happens in each SPI mode.

Now that we have seen how SPI works, let's see some of its drawbacks.

- Any external noise can distort the signals being carried in the wires
- It is inconvenient to route 4 wires together between two points in the car
- As seen in the video, the distance over which SPI is reliable is very low

These problems force us to find something better. Thus, we use iso-SPI.

We use LTC6820 IC to interface between SPI and iso-SPI and switch to a 2-wired communication. Further, we pair them with transformers to provide isolation.

Notice how the wires are twisted? Find why exactly we do this. (hint: iso-SPI uses differential signals)

Question : Why does these iso spi signals do not need amplifiers even for distances as long as 100m .

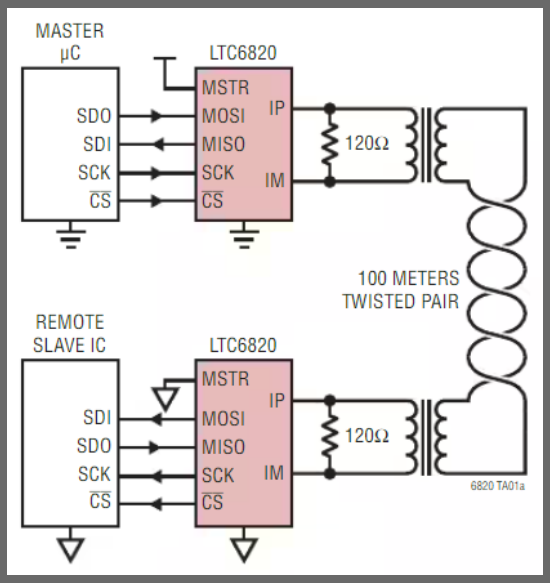

Currently, we use a daisy chain network to communicate between the master and the slaves. But we will be shifting onto a circular chain network. The reason why it is better is because even if the wire connection breaks at a point, the communication is not hindered since a communication path still exists for all the slaves.

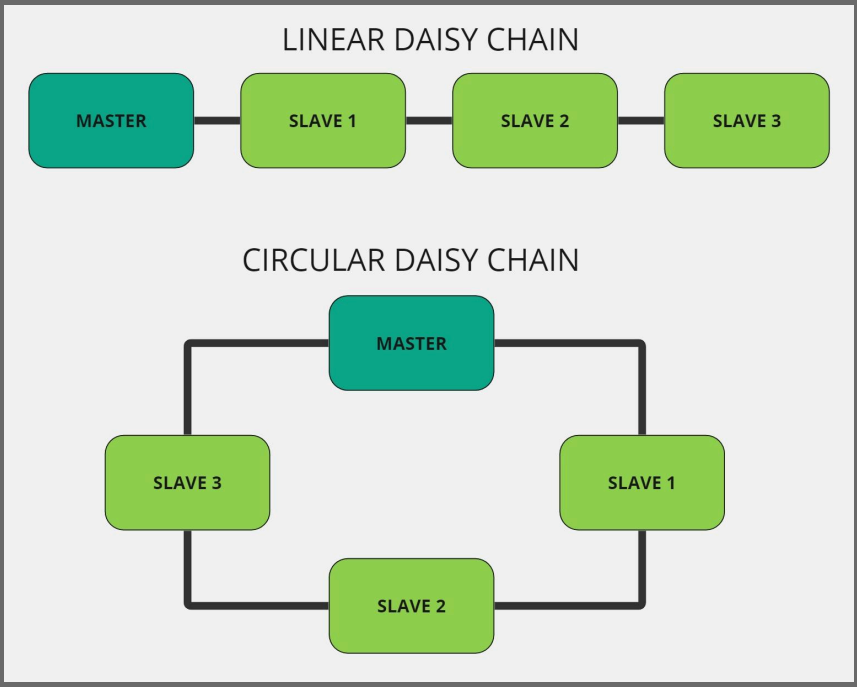

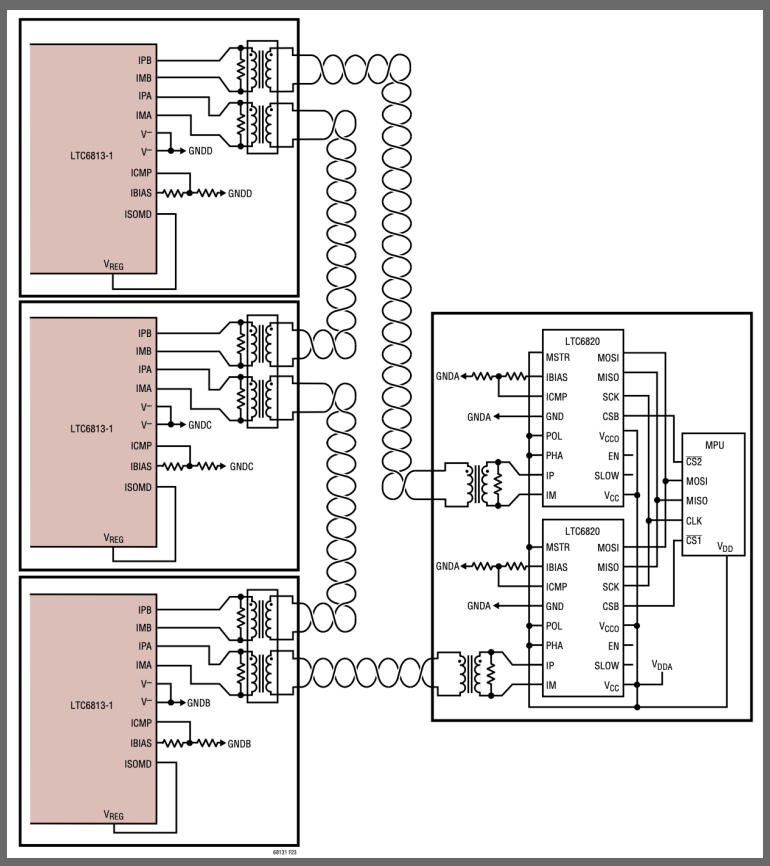

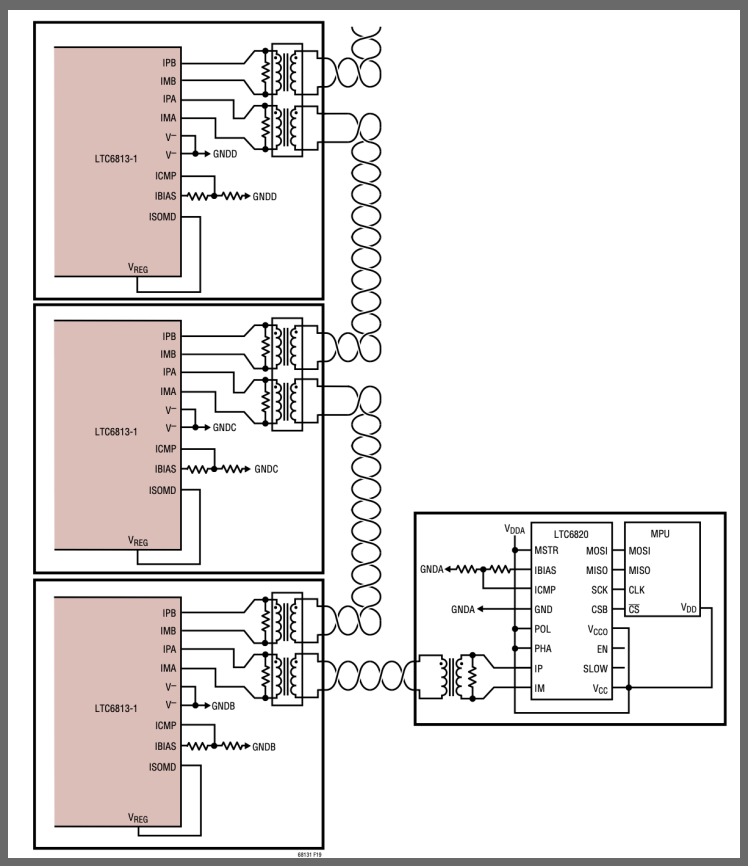

(Straight and Circular Daisy chain interface of master's 6820 to 6813)

Assignment 2-
Demonstrate (on TinkerCAD / in the lab) SPI communication between 2 Arduino by transmitting some data from the master to the slave repeatedly after some interval.

Additional Learning -
Try to look up the OSI model of communication and determine in which layer does the SPI protocol lies in ?
Also learn about the predefined registers used to store information in the microcontroller

→ Cell chemistry and modeling

Typical Li-ion cell discharging curve:

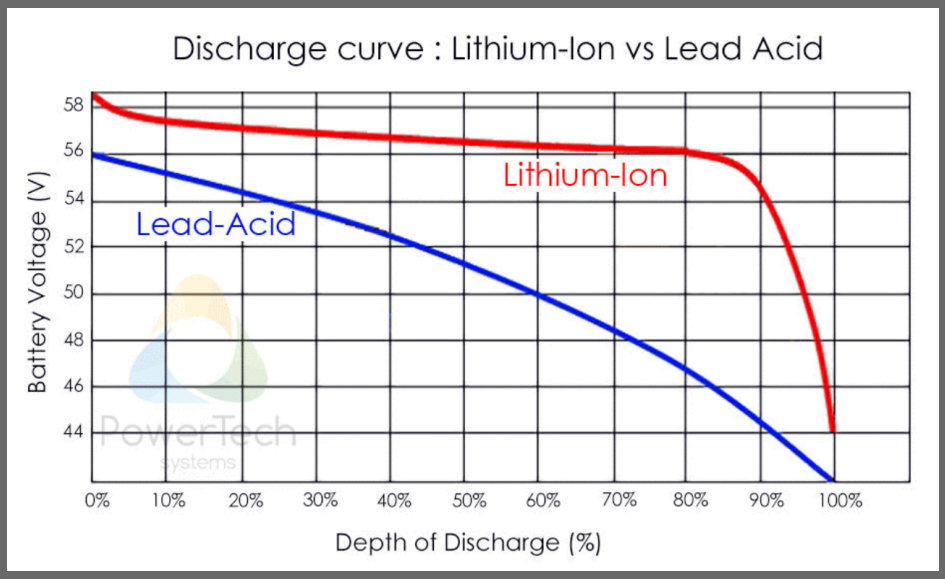

Notice how the voltage remains constant for the Li-ion cell over a wide range? This is what makes proper estimation of SOC essential. To realize the exact capacity of the cells and know how much more our car can run precisely.
Check out the cell datasheet provided before for the exact curves.

Cell Modelling :

- To model a cell some experiments have to be conducted on it such as low current charge discharge test , HPPC test , EIS testing etc. now the results of this test are analyzed to make equivalent cell RC model whose parameters could be used to get a precise estimate of SOC when the car is running.

SOC and SOH :

- The state of charge (SOC) of the cells, is defined as the available capacity (in Ah) and expressed as a percentage of its rated capacity. There are three methods to extract the SOC of the cell: voltage method, coulomb counting, and Kalman filter.

Check out this video to understand what these are:
State of Charge SOC estimation methods | Battery Management...

One of the future goals of our sub-system is to implement the Extended Kalman Filter in SOC measurement to utilize our accumulator to its maximum efficiency.

- the state of health (SOH) of a battery, which represents a measure of the battery's ability to store and deliver electrical energy, compared with a new battery.

  Check out this link for more understanding -
  State of Health of battery | Battery SOH | Battery Management ..

Extra reading mats:

- A Closer Look at State of Charge (SOC) and State of Health (SOH) Estimation Techniques for Batteries | Analog Devices
- How a Kalman filter works, in pictures | Bzarg
- How a cell is modelled

→ Data Analysis

All the data received from our BMS gets logged in the SD card in the master board and the data logger in the encoded format. As a part of BMS, it is our job to decode this data, process it, visualize it, and lastly analyze it. This can be done using Python or other programming languages. The better we can visualize the data, the more easily we can find errors in the system and optimize it. The processed data gives us information about surge currents and error cells. This information can help us in debugging errors and tuning our car. The data received will also help us calculate the SoC.
In order to be proficient in doing this, learn about the various data processing and visualization libraries of Python like pandas and matplotlib. Also, try designing a small gui with tkinter or pyqt library

Just go over these videos for once -
Pandas tutorials
https://youtube.com/playlist?list=PL-osiE80TeTsWmV9i9c58mdDCSskIFdDS&feature=shared
Matplotlib tutorials
https://youtube.com/playlist?list=PL-osiE80TeTvipOqomVEeZ1HRrcEvtZB_&feature=shared
Numpy tutorial
Complete NUMPY for Beginners in just 10 minutes | Python Data Analys...

Assignment 3 -
(Use AMSCelldata97.csv)

1. Plot TSV wrt time.
2. Plot TSC wrt time
3. Plot the average of each column of cell voltages such that it shows the cell imbalance.
4. Find the value of average power using TSC and TSV.

→ Cell balancing techniques

No two cells coming off the same assembly line are exactly the same. There are always manufacturing inconsistencies. Keeping this in mind, charging rates might be different for different cells. This poses a problem. Explore this.

You can watch the following video:

BMS Cell Balancing | Active cell balancing | Passive Cell Balancing | Ba...

Battery balancing - Wikipedia

Quick Quiz: Why not active cell balancing?
Quick Quiz: Assume we are using passive balancing. Should we balance the cells while we are charging (battery connected to charger) or discharging (running the car), or both?
Quick Quiz: On which PCB do you think we use this techniques to balance the cell ?

→ AMS codes flowchart

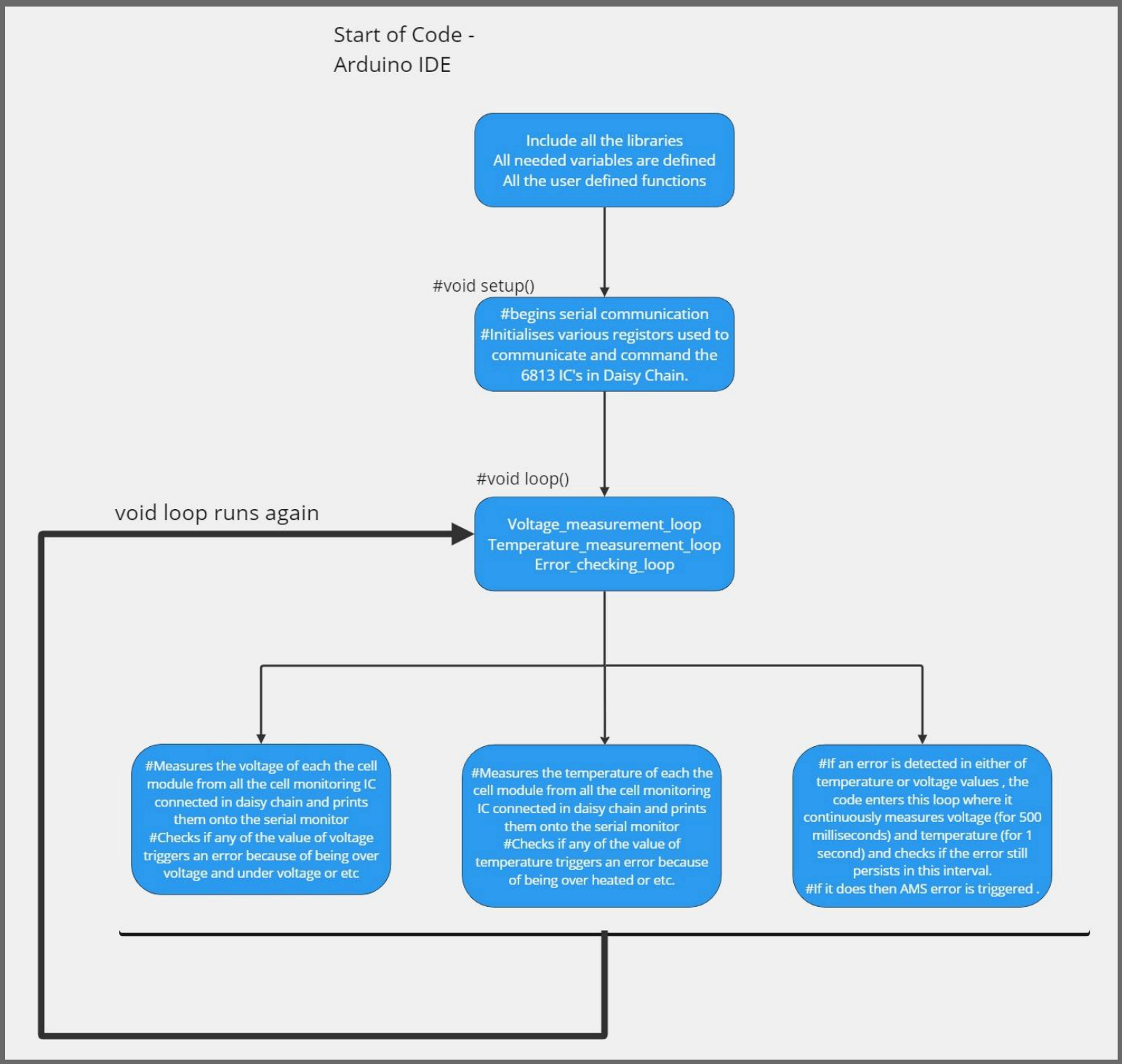
Start of Code -
Arduino IDE
Include all the libraries
All needed variables are defined
All the user defined functions
#void setup()
#begins serial communication
#Initialises various registors used to communicate and command the 6813 IC's in Daisy Chain.
#void loop()
void loop runs again
Voltage_measurement_loop
Temperature_measurement_loop
Error_checking_loop
#Measures the voltage of each the cell module from all the cell monitoring IC connected in daisy chain and prints them onto the serial monitor
#Checks if any of the value of voltage triggers an error because of being over voltage and under voltage or etc
#Measures the temperature of each the cell module from all the cell monitoring IC connected in daisy chain and prints them onto the serial monitor
#Checks if any of the value of temperature triggers an error because of being over heated or etc.
#If an error is detected in either of temperature or voltage values , the code enters this loop where it continuously measures voltage (for 500 milliseconds) and temperature (for 1 second) and checks if the error still persists in this interval.
#If it does then AMS error is triggered .